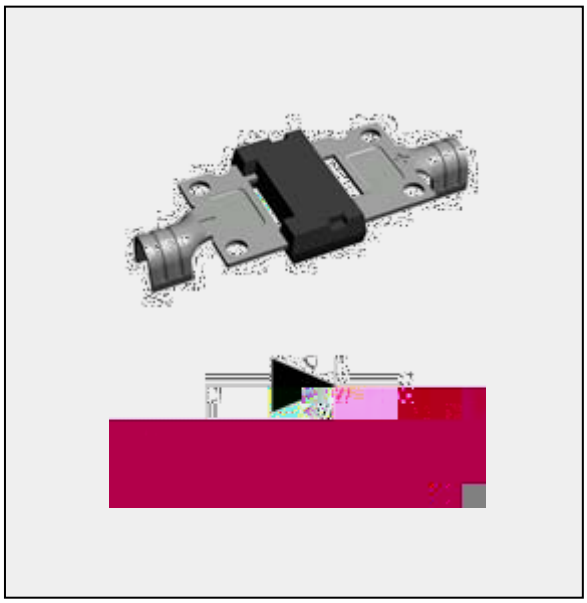

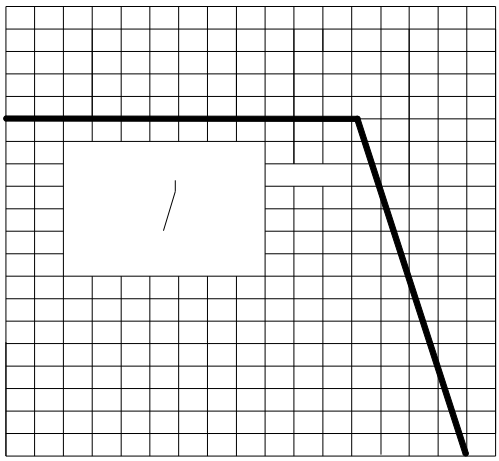

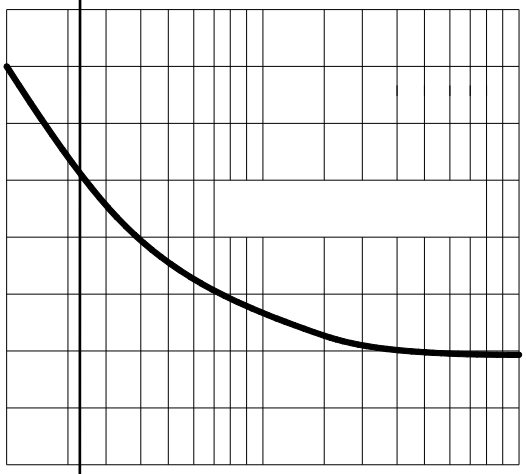

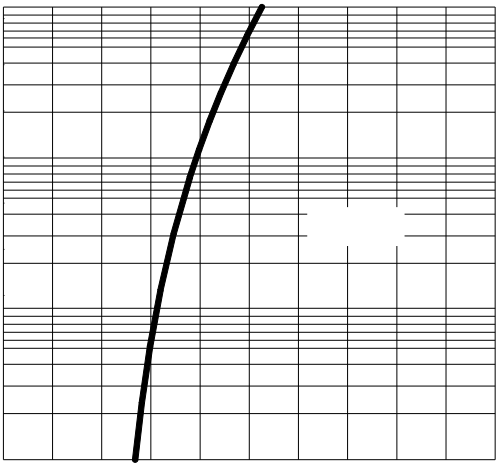

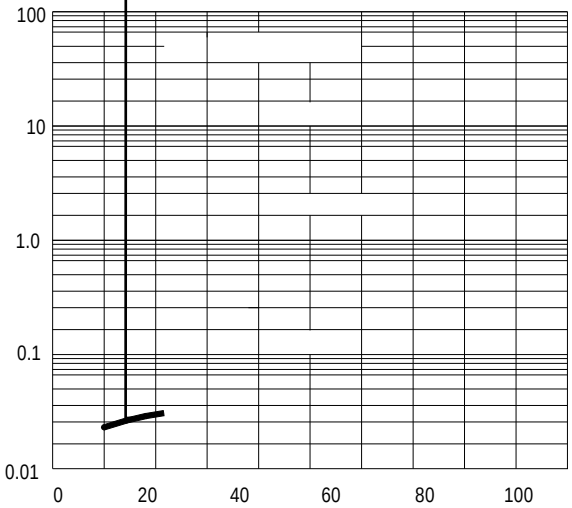
100
10
1.0
0.1
0.01
0
20
40
60
80
100

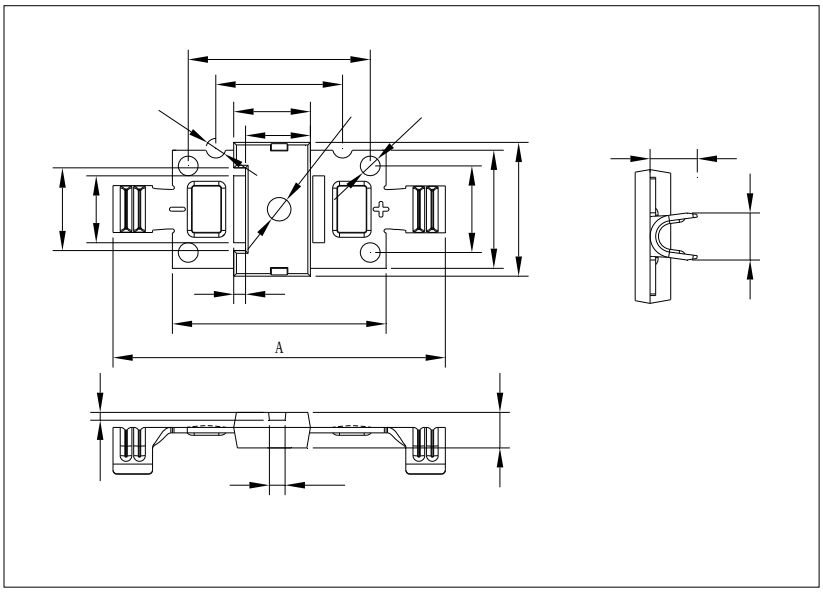

	35	65	
	3	7	
	7	3	